This will go over the schematics and layouts of the boards being used on the SPAM project's final version as of Expo

Power Budget

Load	Rail	Rated voltage	Max current	Idle current	Typical Current	Power consumption	max power
RF Switch	28V	30V	90mA	-	90mA	2.52W	90W
Motor driver	28V	9-42V	5A	0.26A	0.6A	14.4W	120W
Servo motor	7V	7.4V	3A	0.1A	0.8A	7.4W	2.2W
Raspberry Pi	5V	5V	1.5A	0.6A	0.9A	4.5W	7.5W
Gunn diode	5V	5V	-	10mA	250mA	1.25W	
Amplifier	5V	5.5V	35mA	-	27mA	0.081W	-
ESP32	5V	3.3V	400mA	10mA	120mA	0.396W	1.32W
ADC	3.3V	3.3V	1mA	-	0.85 mA	0.0028W	0.0033W

This table covers the expected power rating for each peripheral device interfacing with the power board. The data is taken from the components data sheets and used educated approximations where information was not available as is common in many datasheets. The segmentation of power requirements influenced the layout and performance requirements of the PCB board. All schematics and PCB files related to the project are on the github repo. All datasheets for items are in the budget file.

Power board

Schematic

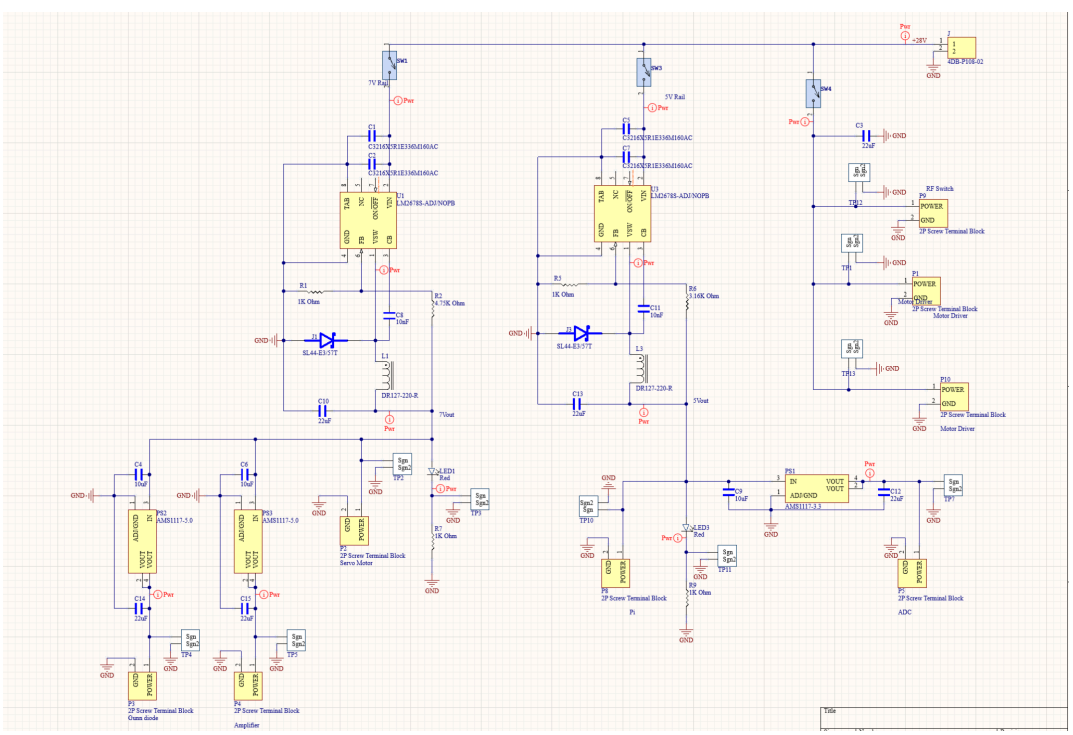

The power source was to be a 28V PSU connected to a wall outlet as the main feed to power the motor drivers and RF switch directly with the 28V. Each rail has a decoupling capacitor and a switch to selectively turn off/on power without disrupting the main PSU supply for easy debugging and isolation of problems.

There are 2 more rails each with the same adjustable buck converter package to step down the voltages. I chose this one for its wide voltage range and its high efficiency.

The resistor values for the rails were calculated using the aid of the buck converter datasheet and selecting them according to instructional guidance to achieve exact output levels as shown below.

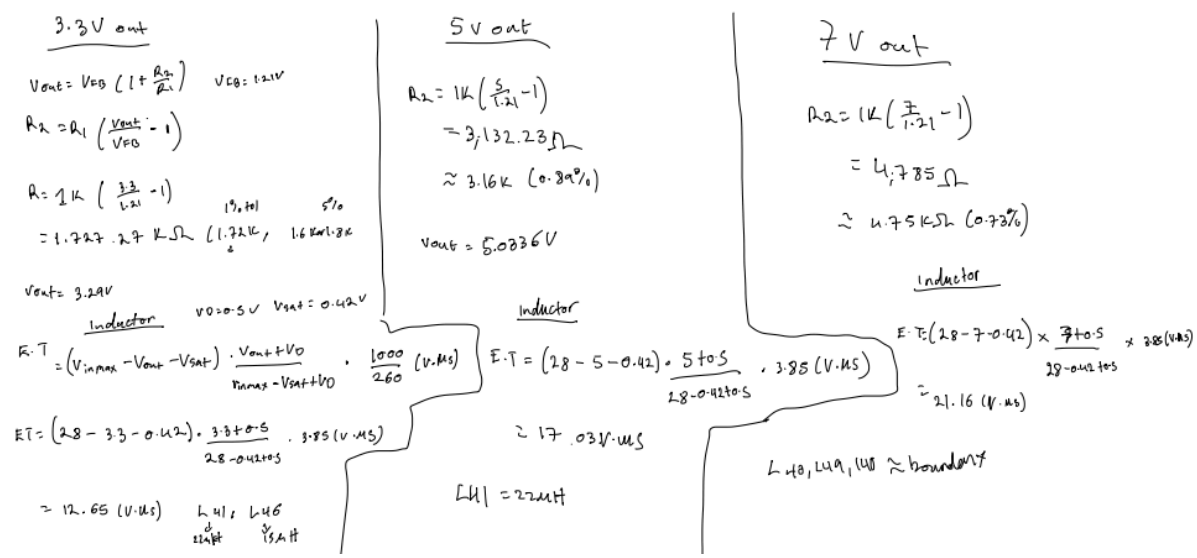

I also used capstone stocked LDOs to bring down the voltages from 5V to 3.3V for the ADC and 7V to 5V for the gunn diode and other RF. This is because the LDO has better line regulation and no switching noise so it's better for RF components since they require stable supplies to work properly. These are also fitted with both input at output capacitors to further improve signal integrity.

I used screw terminals for all outputs to interface with the peripherals since jumper cables seemed like the best way to have everything connected to the central board and a screw terminal strip for the PSU input with crocodile teeth connectors.

Layout

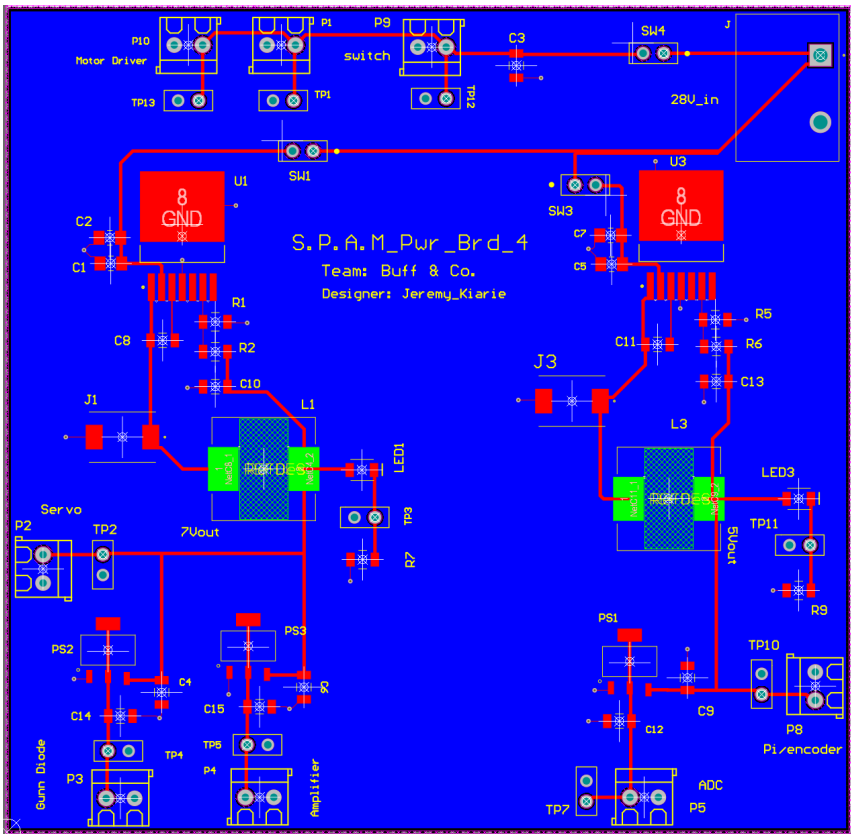

The board layout uses a standard 2 layer board, is roughly 4inX4in with the ground plane as a polygon pour. I kept the outputs of each rail on the edges of the board for easier connection. I predominantly used 20 mil lines since there were multiple peripheral per buck output meaning larger concentrated current draw per rail.

A design note is keeping the TPs for some outputs out of the line of power to avoid the discontinuous like gap on the board and move them off to the side like for the rest.

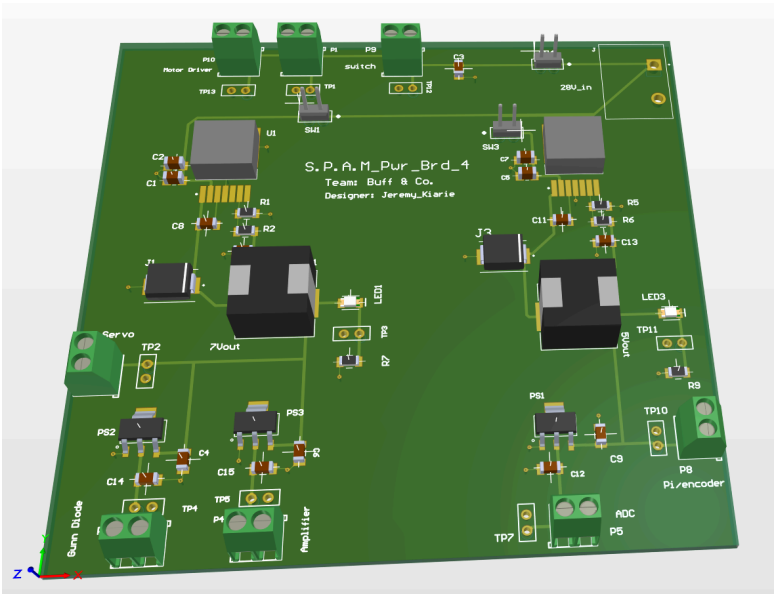

ESP/Encoder board

Schematic

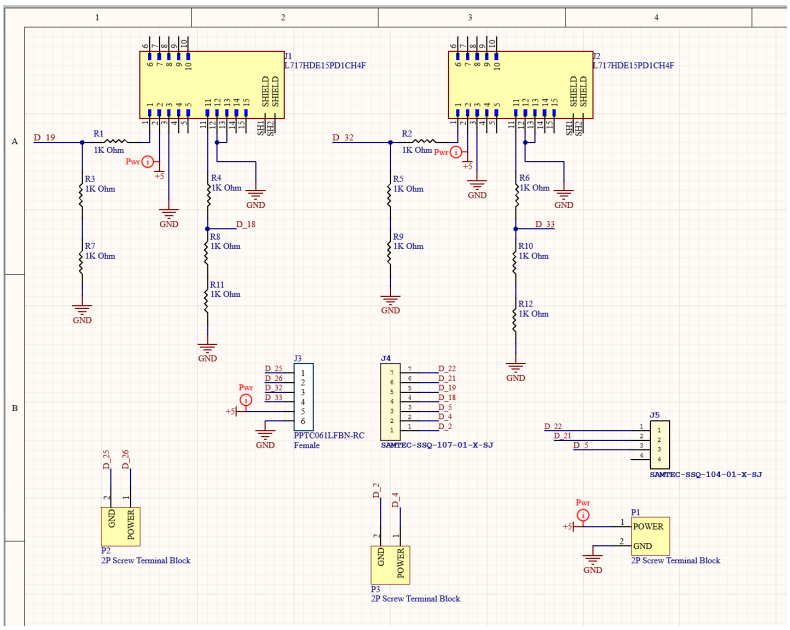

This is the layout for the board that powers the Pi, ESP and also allows communication to the arm motor encoders via the vga cables and gender changing connectors. The board is powered from the main power board via the 5V output which is what connects to the 5V inputs. Voltage dividers are used to supply collect logic levels and the header pins are used to connect to the pi and ESP.

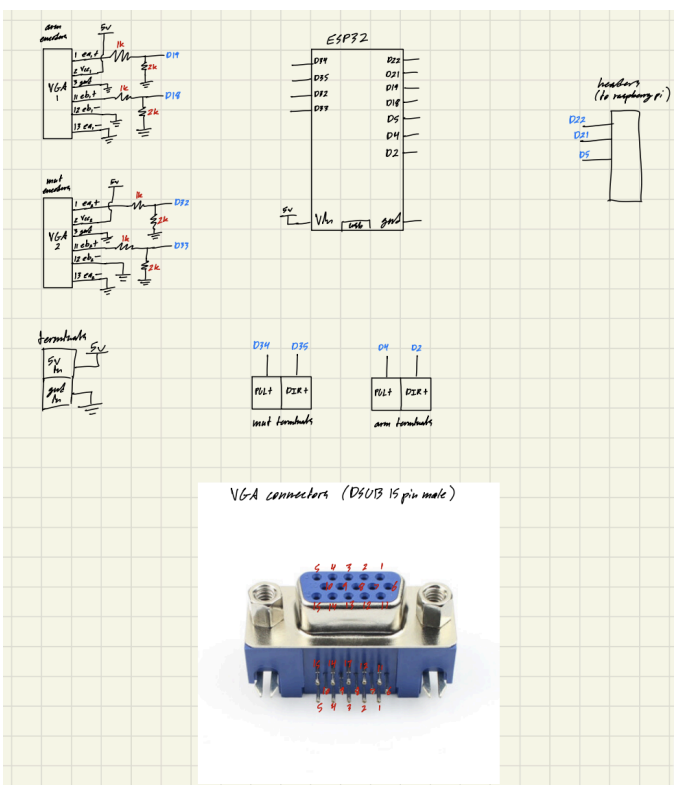

This was the design I was working off from Dillion Brown who was handling the firmware.

Layout

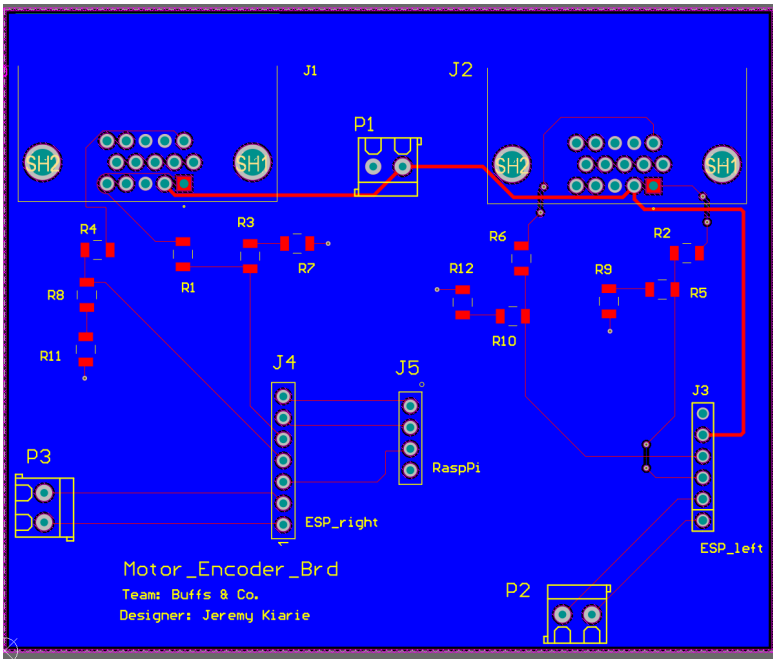

Standard 2 layer board and since it was mainly a signal board traces are kept small.

A progression would be orienting it so that the Pi can seamlessly connect onto it.

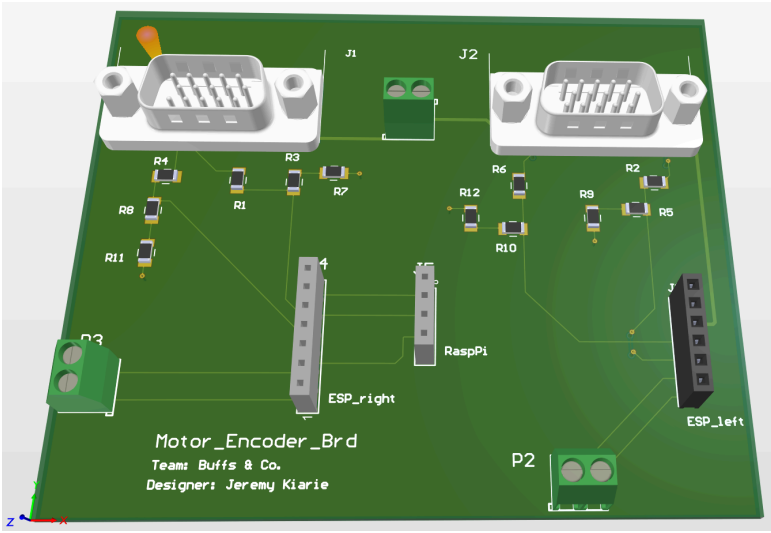

For footprints i used SnapMagic for almost all since it has Altium compliant versions and usually have good libraries with both models and footprints.